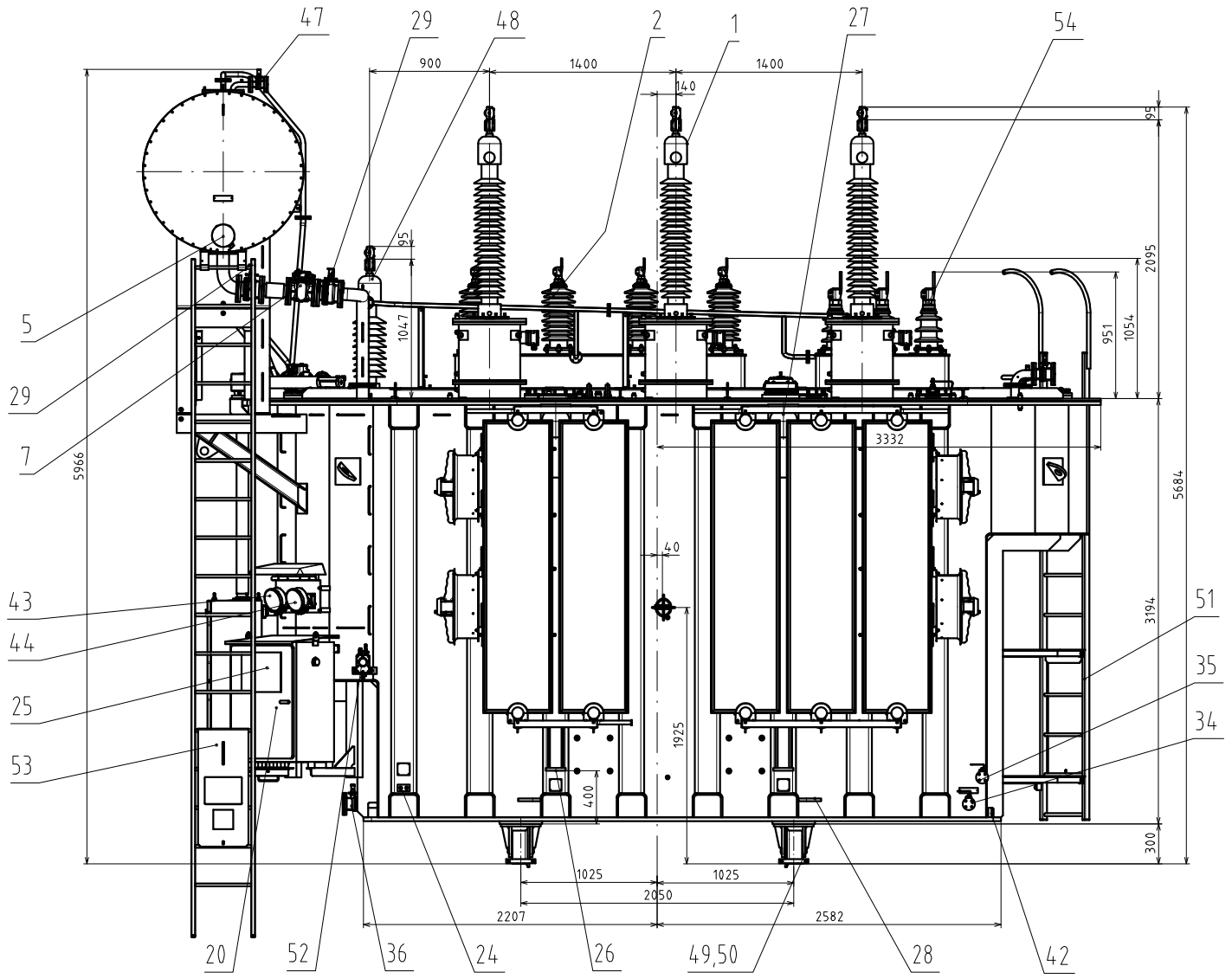

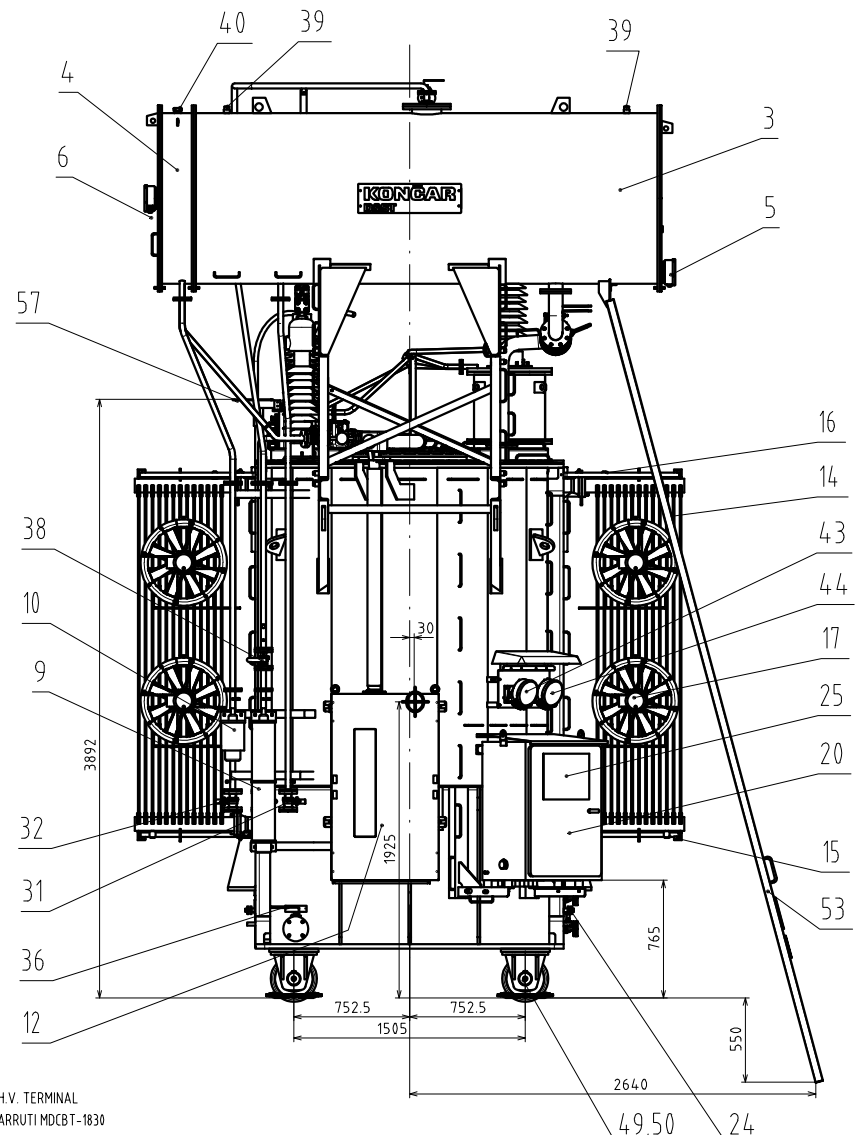

1. H.V. BUSHING "TRENCH" COT 550-800
2. M.V. BUSHING "CEDASPE" 52kV/1250A
3. OIL CONSERVATOR FOR TRANSFORMER WITH FLEXIBLE SEPARATOR
4. OIL CONSERVATOR FOR O.L.T.C.
5. OIL LEVEL INDICATOR FOR TRANSFORMER "MESSKO" MTO
6. OIL LEVEL INDICATOR FOR O.L.T.C. "MESSKO" MTO
7. GAS AND OIL ACTUATED RELAY
8. O.L.T.C. PROTECTIVE RELAY
9. SILICAGEL BREATHER FOR TRANSFORMER "RUNE HAMP" 4140
10. SILICAGEL BREATHER FOR O.L.T.C. "RUNE HAMP" 4130-2
11. ON - LOAD TAP CHANGER (O.L.T.C.) "MR" VM III 300Y-72.5/B
12. MOTOR DRIVE UNIT FOR O.L.T.C. "MR" ETOS
13. CORE EARTHING
14. COOLING RADIATOR
15. COOLING RADIATOR DRAIN PLUG
16. COOLING RADIATOR DEARATION PLUG
17. COOLING FAN
18. HANDHOLE FOR ACTIVE PART LIFTING
19. CURRENT TRANSFORMATOR - TERMINAL CT1
20. SIGNALS AND COOLING CABINET
21. OIL TEMPERATURE INDICATOR THERMOMETER POCKET
22. WINDING TEMPERATURE INDICATOR THERMOMETER POCKET
23. THERMOMETER POCKET (SPARE - 2 PCS.)
24. MAIN EARTHING TERMINAL (2 PCS.)
25. RATING PLATE
26. JACKING PAD (4 PCS.)
27. TRANSFORMER LIFTING PROVISION (4 PCS.)
28. TRANSFORMER PULLING EYES (8 PCS.)
29. MAIN PIPEWORK VALVE - 80mm
30. OIL DRAIN VALVE FOR O.L.T.C. - 25mm
31. OIL DRAIN VALVE FOR MAIN CONSERVATOR - 25mm
32. OIL DRAIN VALVE FOR O.L.T.C. CONSERVATOR - 25mm
33. O.L.T.C. PIPEWORK VALVE - 25mm
34. OIL SAMPLING VALVE BOTTOM - 15mm
35. OIL SAMPLING VALVE TOP - 15mm
36. FILTER - DRAIN VALVE - 50mm
37. FILTERING VALVE - 50mm
38. DEHYDRATING BREATHER VALVE - 25mm
39. AIR VENT PLUG ON MAIN CONSERVATOR
40. OIL FILLING PLUG FOR O.L.T.C. CONSERVATOR
41. SHUT - OFF VALVE FOR COOLING RADIATOR - 80mm
42. OIL DRAIN PLUG M52-2 (DIN42548-R)
43. OIL TEMPERATURE INDICATOR "MESSKO" MT-ST160SK/TT
44. WINDING TEMPERATURE INDICATOR "MESSKO" MT-ST160W/TT
45. PRESSURE RELIEF DEVICE "QUALITROL"
46. CURRENT TRANSFORMATOR - TERMINAL CT1,CT2
47. DEAERATION VALVE -25mm
48. H.V. NEUTRAL BUSHING "TRENCH" COT 325-800
49. WHEEL
50. WHEEL ARRESTING DEVICE
51. LADDER WITH HANDRAIL
52. GAS SAMPLING DEVICE
53. INSPECTION LADDER FOR BUCHHOLZ RELAY
54. L.V. BUSHING "KONCAR" 20kV/3150A
55. PT 100 (O.L.T.C.)
56. OFF-CIRCUIT TAP CHANGER "MR" DU III 800-36Y
57. SUPPORT FOR L.V. SURGE ARRESTER

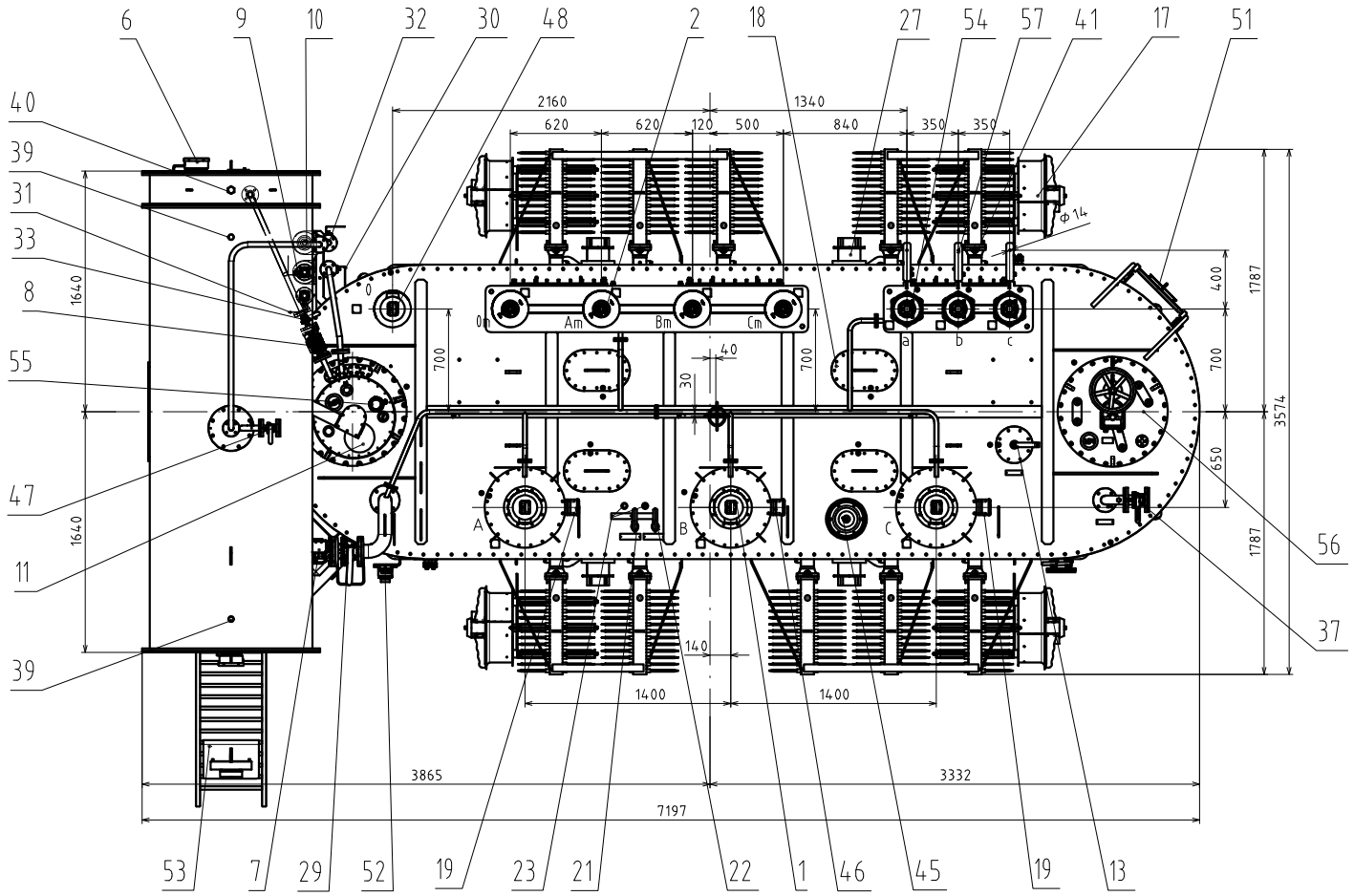

H.V. TERMINAL
ARRUTI MDCBT-1830
Material: Aluminium

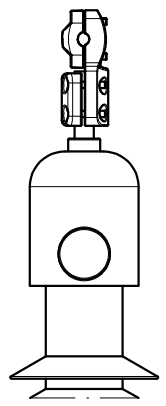

LIFTING AND UNTANKING

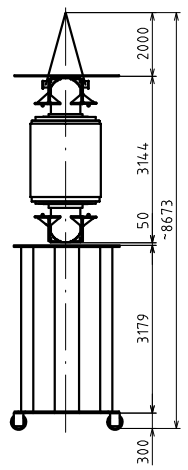

M.V. TERMINAL

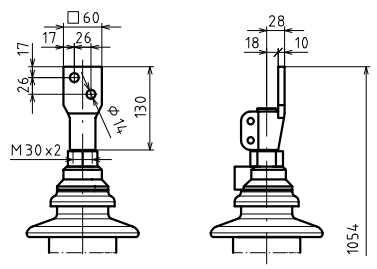

L.V. TERMINAL

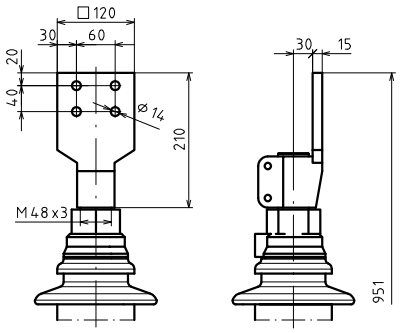

TOTAL MASS: 86500 kg
MASS OF OIL: 20000 kg
TRANSPORT MASS: 78600 kg (with oil)
UNTANKING MASS: 53000 kg

FOR TRANSPORT DISMOUNT:
1. CONSERVATOR WITH ADDITIONAL PARTS
2. COOLING RADIATORS AND COOLING FANS
3. H.V. BUSHINGS AND TURRETS
4. M.V. BUSHINGS
5. L.V. BUSHING FLAGS
6. SUPPORTS FOR L.V. SURGE ARRESTERS
7. WHEELS

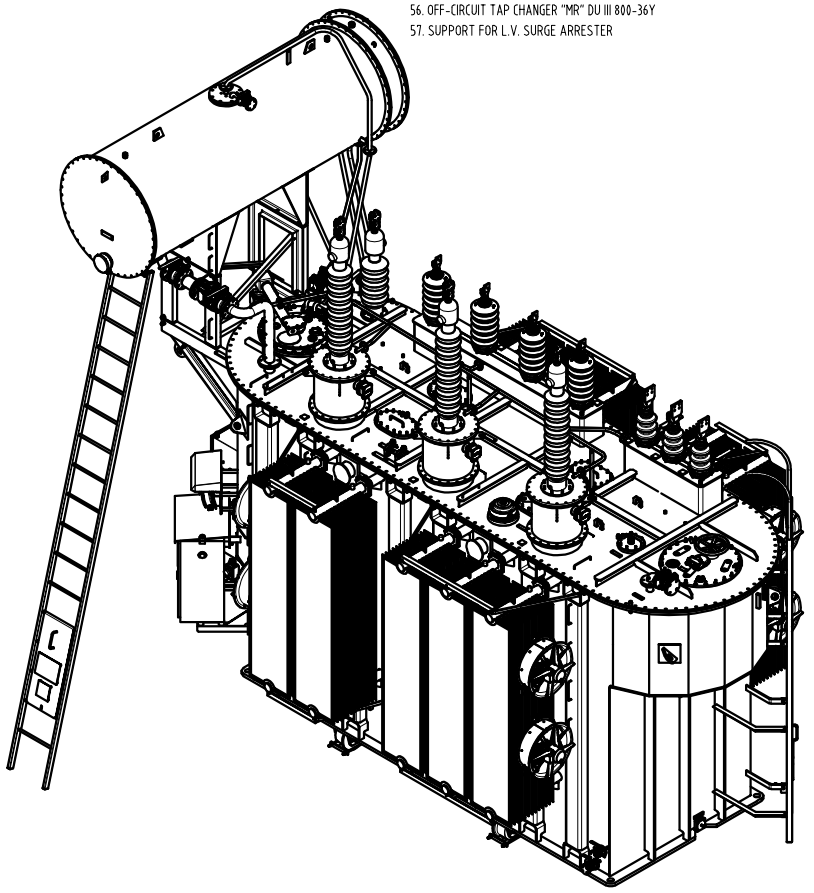

Klijent (Client):				Projekt (Project):		TAUSALO
UAB AUSGA,LITHUANIA				40 MVA, 115±9x1.7778% / 33-2x2,5%-4x2,5%/10,5 kV, YNyn0d11, ONAN/ONAF		
				Izradio (Design.)	Odobrio (Appr.)	Naziv (Title): OUTLINE DRAWING
				ing.Franić	ing.Adamić/Lampl	
Rev	Preuzjo: (Rev.No.)	Datum (Date)	Ime (Sign)	Datum (Date)	04.02.2026.	Tipska oznaka (Type designation): TRPL40000-123/MC

KONČAR - DISTRIBUTIVNI I SPECIJALNI TRANSFORMATORI d.d.
Josipa Mokrovića 8, P.P.100, 10090 Zagreb, HRVATSKA
Tel.(+385 1) 33 83 777 Fax (+385 1) 37 94 451
E-mail: info@koncar-dst.hr, www.koncar-dst.hr

Broj dijela (Part No.): G29849 | Rev: -

Mjerilo (Scale): 1:25 | List (Sheet) 1 | Listova (Sheets) 1